Dakota™ PLUMBING PRODUCTS
"Quality for Life"

BUILDERS COLLECTION | GENESIS R SERIES

GSR-18-1916

UPC:

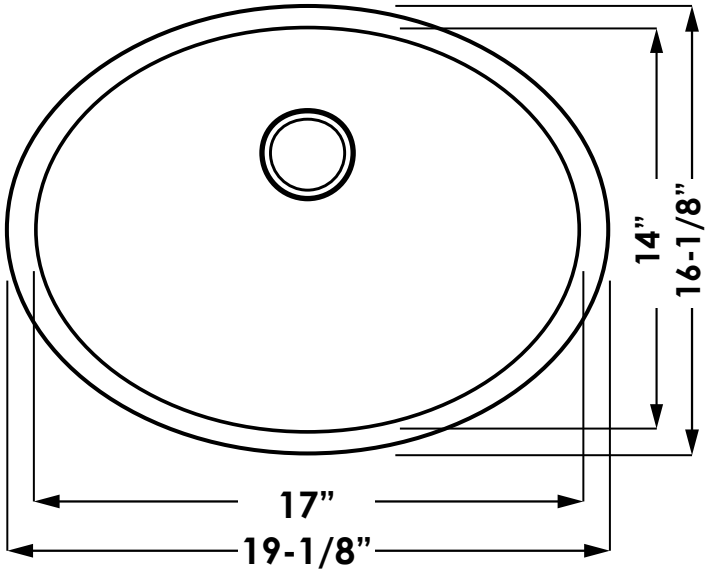

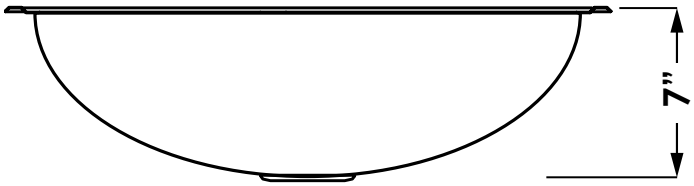

Style:

- Oval
- Undermount
- Lavatory Sink
- Single Bowl

LIFETIME LIMITED WARRANTY

Size:

- Overall: 19.125"x16.125"x7"
- Bowl Size: 17"x14"x7"

Features:

- 18 Gauge Thickness
- 304 Stainless Steel Sink
- 18/10 Chrome/Nickel Content

Certifications:

- cUPC
- NQA ISO 9001
- UKAS
- CSA

Warranty:

- Lifetime Limited Warranty

Available Color/Finish

Brushed Nickel

Available Accessories:

- Hand Towel: DSA-KHT
- Sink Squeegee: DSA-SQUEEGEE