Dakota™ PLUMBING PRODUCTS
"Quality for Life"

Signature COLLECTION | R-Series

# DSR-3018

UPC: 813649021196

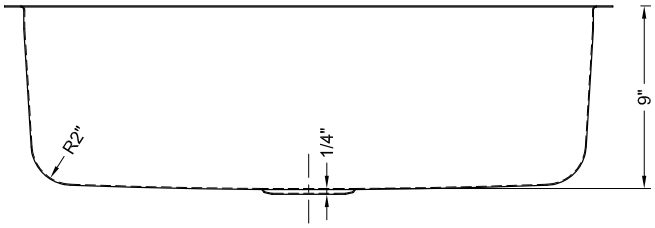


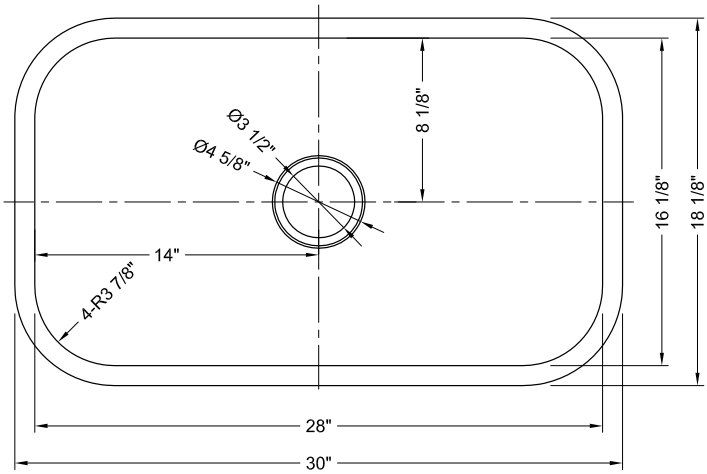


## Style:

- Standard Radius
- Undermount
- Kitchen Sink
- Single Bowl

LIFETIME LIMITED WARRANTY

## Size:

- Overall: 30"x18.125"x9"
- Bowl Size: 28"x16.125"x9"

## Features:

- 16 Gauge Thickness
- 304 Stainless Steel Sink
- 18/10 Chrome/Nickel Content
- Extra Large Sound Cancellation Pads
- Thermal Undercoating

## Certifications:

- cUPC

## Warranty:

- Lifetime Limited Warranty

## Bulk Available:

- DSR-3018B

## Available Color/Finish

Brushed Nickel

## Included Accessories:

- Bottom Grid(s): DSR-BG3018
- Basket Strainer: DSA-PBSSS